The University of Melbourne
Semester 2 Assessment 2016

School of Physics

PHYC10004
PHYSICAL SCIENCE AND TECHNOLOGY

Reading time:	**15 minutes**
Exam Duration:	**3 hours**
This paper has:	**9 pages + 2 pages of formula**

Authorised Materials:	All calculators are permitted, but should not have been programmed nor should they store additional information. Dictionaries, including language dictionaries, are prohibited.

Instructions to Invigilators:	The final two pages of this exam paper contain formulae and data for the use of candidates. These pages may be detached. **This examination paper is to remain in the examination room. Students may not retain any part of this exam.**

Instructions to students:	Attempt ALL questions. The total number of marks is 150. Two pages containing formulae and data are included at the end of the exam paper. These pages may be detached, but may not be removed from the examination room.

Paper to be held by the Baillieu Library.

This page is intentionally blank

Question 1 **[3 + 2 + 5 + 3 + 2 = 15 marks]**

(a) Consider a ring of charge of radius a and total charge Q.

(i) Show that the magnitude of the electric field, E, produced by this ring of charge is given by

$$E = \frac{1}{4\pi\varepsilon_0}\frac{Qx}{(a^2+x^2)^{3/2}}$$

where x is the distance from the centre of the ring to a point on the axis of the ring.

(ii) Under which circumstances does E approach the field strength due to a point change, Q?

(b) An electric dipole is formed by assembling two charges, $+q$ and $-q$, a distance d apart. The electric dipole moment is a vector, μ, which has a magnitude qd and a direction that points from $-q$ to $+q$.

(i) Show that the magnitude of the electric field of the dipole in the direction $\bar{\mu}$ is given by

$$E = \frac{1}{2\pi\varepsilon_0}\frac{\mu}{r^3}$$

where $\mu=|\bar{\mu}|$ and r is the distance from the midpoint of the electric dipole. You may assume that r >> d.

(ii) Sketch the electric field associated with this electric dipole.

(iii) What is the electric potential energy of the system of charges associated with the dipole?

Question 2 **[5 + 2 + 5 + 3 = 15 marks]**

The capacitance, C, of a device consisting of two separated charged plates is defined to be $C=q/V$, where q is the charge on the plates ($+q$ on one plate and $-q$ on the other) and V is the potential difference between the plates.

(i) By selecting appropriate Gaussian surfaces and justifying any assumptions that you make, use Gauss's Law to show that the capacitance of a device consisting of two parallel metal plates of area A separated by a distance d is given by

$$C = \frac{\varepsilon_0 A}{d}.$$

(ii) How large must A be if d=1 mm and C=1 mF?

(iii) Use Gauss's Law to determine the capacitance of a device consisting of two thin, concentric conducting cylinders, each of the same length, l, and of radius a and b, respectively, where $a < b$.

(iv) A dielectric material of dielectric constant κ is introduced between the plates of this cylindrical capacitor. What is the capacitance of this system?

Question 3 **[5 + 4 + 6 = 15 marks]**

(a) A resistor, R_T , forms part of the bridge circuit shown below, in which R_V is a variable resistor, R_1, R_2, R_3 and R_T are fixed resistors and E is an EMF. Use Kirchoff's Rules to determine the value of R_V for which the current through R_T vanishes.

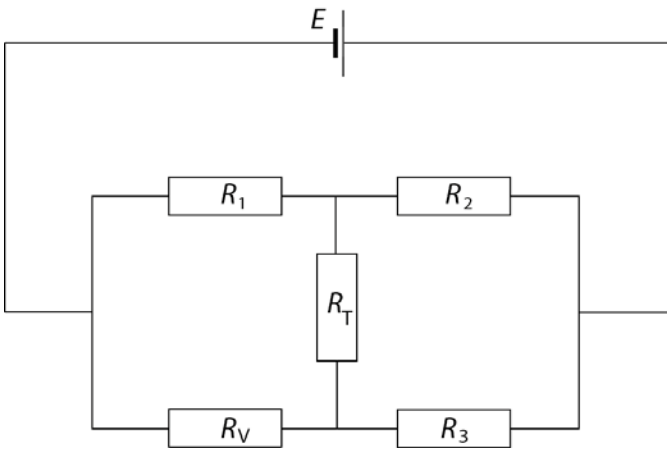

(b) A Victorian power station burns brown coal to produce steam, which drives turbines that maintain a time-varying magnetic flux at a frequency of 50Hz. This produces an EMF, in accordance with Faraday's Law of Induction, that delivers electric power that is distributed through a distribution network. This particular power station produces 1.2 x 10^9 watts of electrical power.

(i) If the resistance of the distribution network is 1Ω, compare the power dissipated by the distribution network as heat if it were operated at a potential difference of either 240V or 500kV.

(ii) In order to reduce losses due to dissipation of the power as heat over the long distance from the power station to our homes, the network operates at several distinct potential differences. It is transmitted at 500kV for most of the distance from the power station to the metropolitan area. It is next transformed at electrical substations to approximately 20kV and it is finally transformed to 240V in local neighbourhoods for delivery to our homes. Within our homes we often transform the 240V mains supply to 5V to power low-voltage devices such as phone chargers. Use Faraday's law of induction to design ideal transformers that are able to perform each of these changes in EMF.

Question 4 **[3 + 3 + 3 + 3 + 3 = 15 marks]**

(a) A particle of mass *m* and charge *q* moving with speed *v* is introduced into a region in which there exists a magnetic field of strength *B*.

(i) Use the Lorentz force law to show that the particle will undergo circular motion with frequency

$$f = \frac{qB}{2\pi m}$$

independent of the speed, where f is known as the cyclotron frequency.

(ii) Explain how an alternating electric field at the cyclotron frequency can be employed to accelerate charged particles.

(iii) What is the maximum kinetic energy that can be acquired by a particle of mass *m* and charge *q* in a cyclotron of radius *R*?

(b) In the lowest-energy level of the Bohr model of the hydrogen atom, an electron performs a circular orbit of a stationary proton with orbital radius 5.3×10^{-11} m and orbital frequency 6.5×10^{15} Hz.

(i) By regarding the motion of the electron as a continuous ring of moving charge, use Ampere's Law to determine the magnitude of the magnetic field at any point along a line perpendicular to the orbital plane of the electron and passing through the proton.

(ii) What is the effective orbital magnetic moment of the hydrogen atom in the Bohr model of the hydrogen atom?

Question 5 **[1 + 3 + 1 + 5 + 5 = 15 marks]**

(a) A toroidal magnet formed by wrapping N turns of wire around a toroidal former, which is an object made from non-magnetic material with an exterior surface that resembles that of a doughnut. If the wire carries a current, i, determine the magnitude and direction of the magnetic field, B, produced by a toroidal magnet for

(i) $0 < r < a$

(ii) $a < r < b$,

(iii) $r > b$

where r is the distance from the centre of the toroid, a is the shortest distance from the centre of the torus to the toroidal surface and b is the largest distance from the centre to the surface. In order to specify the direction of B, note from the figure below of the cross section of the toroidal magnet that the current flows into the page at $r=a$ and out of the page at $r=b$.

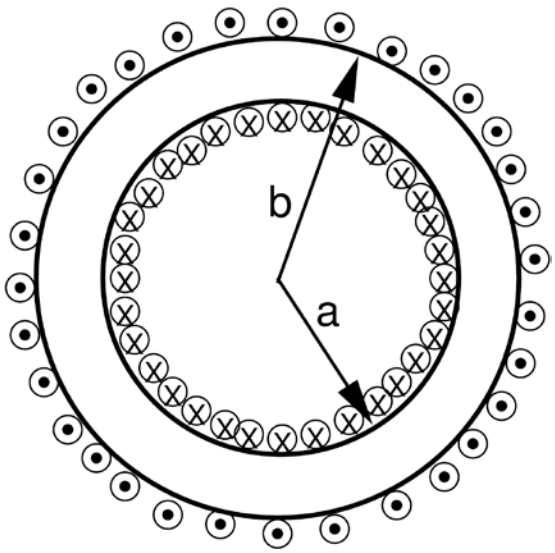

(b) A parallel plate capacitor consisting of two axially-aligned circular plates of radius R is initially discharged at $t=0$. It is connected to a potential difference, which causes it to start charging and for the electric field between the plates to increase rapidly in magnitude, so that $dE/dt > 0$ for $t>0$. Assuming that the electric field between the plates is uniform and that the electric field vanishes outside the plates, calculate the magnitude of the magnetic field in the region defined by the two infinite planes that touch the two interior surfaces of the capacitor plates for

(i) $0 < r < R$,

(ii) $r > R$,

where r is the radial distance measured perpendicular to the common axis of the two circular plates.

Question 6 **[3 + 4 + 4 = 11 marks]**

Legend has it that a small Dutch boy saved Holland from inundation by plugging a 1.2 cm diameter hole in a dyke, with his finger. The hole was 2.0 m below the level of the North Sea.

(i) Calculate the force of the water on his finger. Assume the density of the sea water is 1030 kg/m^3. P_0 = 1atm = 101.3kPa.

(ii) If he pulled his finger out of the hole, how long would take for the released water to fill one hectare of land (10^4 m^2) to a depth of 1 m? Assume that the hole remains constant in size.

(iii) In a flood, objects may be displaced. A large box has a mass of 500 kg and a volume of 0.500 m^3 and lies at the bottom of the flooded area. How much force is needed to lift it (at constant velocity)?

Question 7 **[5 + 2 + 4 + 2 + 1 = 14 marks]**

(a) Calculate the heat required to convert 1.0 kg of ice at –10°C into water at 10°C.

DATA: Specific heat capacity of water = 4180 J kg^{-1}K^{-1}; latent heat of fusion of ice = 334 kJ kg^{-1}; specific heat capacity of ice = 2030 J kg^{-1}K^{-1}.

(b) A mass of ideal gas is placed in the cylinder in the diagram below. The cylinder is fitted with a freely sliding piston and a constant load is placed on it. When the system is in equilibrium, a burner is switched on beneath the piston, transferring heat into the gas and raising the temperature. You can assume mechanical equilibrium is maintained throughout the heating process.

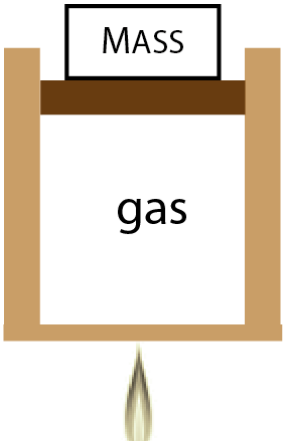

(i) Sketch a *pV* diagram of the gas during the heating process.

(ii) During this process, does the gas have work done on it, or does the gas do work? Justify your answer carefully.

(c) In a constant volume process 300 J of energy are transferred by heat to 1 mol of argon gas (a monoatomic gas) initially at 300 K. Calculate:

(i) The increase in the internal energy of the argon gas.

(ii) The work done on the gas.

Question 8 **[3 + 4 + 4 + 2 + 4 + 3 = 20 marks]**

(a) Lithium, beryllium, and mercury have work functions of 2.30 eV, 3.90 eV, and 4.50 eV respectively. Light with a wavelength of 400 nm is incident on each of these metals.

(i) Determine which of these metals would exhibit the photoelectric effect. Justify your answers quantitatively.

(ii) Find the maximum kinetic energy of the photoelectrons in each case.

(b) In a Bragg scattering experiment, 54.0 eV electrons were diffracted from a nickel lattice. The first maximum in the diffraction pattern was observed at $\theta = 50.0^{o}$. Determine the lattice spacing a between the atoms (assume a 2 dimensional lattice). Note: $2d\sin\theta = m\lambda$.

(c) The uncertainty in the momentum Δp of a 400 g football thrown at 10 m s^{-1} by a player during Δt is 1.0×10^{-6} kg m s^{-1}. Note: $\hbar = h/(2\pi)$.

(i) What is its uncertainty in position, Δx?

(ii) An electron in the football is travelling at the same speed and has the same value for Δv, the uncertainty in its speed. What is the uncertainty in its position?

(iii) Comment on the difference in the uncertainty of momentum between the ball and the electron.

Question 9 **[3 + 3 + 3 + 2 + 2 + 3 = 16 marks]**

(a) Students are studying the emission spectrum of hydrogen.

(i) The longest wavelength in the Lyman series (finishing on $n = 1$) for a hydrogen atom is 121.5 nm. Specify the transition that this corresponds to. Show your reasoning.

(ii) Find the shortest wavelength in the Balmer series (finishing on $n = 2$). Show your reasoning.

(b) Bohr's theory of the hydrogen atom met with considerable success.

(i) Show that $nh/(2\pi) = mvr$, a quantisation condition that he introduced, can be obtained by requiring an integral number of standing matter waves around an electron orbit of radius r.

(ii) Calculate the radius of the Bohr hydrogen atom for $n = 6$.

(iii) Calculate the speed of a Bohr electron in a $n = 6$ state in a hydrogen atom.

(iv) How do the results in (ii) and (iii) compare with the radius and speed in $n = 1$?

Question 10 **[3 + 2 + 3 + 2 + 4 = 14 marks]**

(a) 3.0×10^7 atoms of radon (all $^{222}_{86}Rn$) are sealed in a container. Its half-life is 3.38 days.

(i) Calculate the decay constant for ^{226}Rn in units of day^{-1} and s^{-1}.

(ii) Calculate the number of ^{226}Rn atoms remaining after 31 days.

(iii) Compare the activity (dN/dt) of the ^{226}Rn just after the laboratory is sealed and after 31 days.

(iv) Find the radius of a $^{222}_{86}Rn$ nucleus.

(b) $^{222}_{86}Rn$ is the daughter of $^{226}_{88}Ra$ nucleus through α decay. Calculate the energy released per atom by this decay in joule and MeV. Note: $E=mc^2$

DATA: Mass of ^{226}Ra = 226.0254u; mass of ^{222}Rn = 222.0175u; mass of α particle = 4.0012u.

End of Exam Questions

Formula Sheet and Useful Data for PHYC10004
Page 1 of 2

Constants

Mass of electron, m_e	9.11×10^{-31} kg	Bohr radius, a_B	0.529×10^{-10} m
Mass of proton, m_p	1.67×10^{-27} kg	Rydberg constant, R	1.097373×10^{7} m^{-1}
Electron charge magnitude, e	1.60×10^{-19} C	Stefan-Boltzmann constant, σ	5.67×10^{-8} W m^{-2} K^{-4}
Permeability of free space, μ_0	$4\pi \times 10^{-7}$ T m A^{-1}	Boltzmann constant, k	1.38×10^{-23} J K^{-1}
Universal gas Constant, R	8.31 J K^{-1}mol^{-1}	Avogadro's number, N_A	6.02×10^{23} mol^{-1}
Permittivity of free space, ε_0	8.85×10^{-12} C^2 N^{-1} m^{-2}	Speed of light in vacuum, c	3.00×10^{8} m s^{-1}
Planck's constant, $h = 6.63 \times 10^{-34}$ J s $= 4.14 \times 10^{-15}$ eV s		Gravitational acceleration, g	9.8 m s^{-2}
		1 eV = 1.60×10^{-19} J	

Formulae

$R = A_1 v_1 = A_2 v_2$	$p = qd$	$V = iR$	$E = vBl$
$p + \rho gh + \frac{1}{2}\rho v^2 = const$ $p = p_A + \rho gh$	$\tau = p \times E$ $U = -p.E$	$\frac{V_S}{V_P} = \frac{N_S}{N_P}$	$\xi = -\frac{d\phi_B}{dt}$
$\frac{F}{A} = Y\frac{\Delta L}{L}$	$\int E.dA = \frac{q}{\varepsilon_0}$	$P = iV = i^2 R = \frac{V^2}{R}$	$\int E.dl = -\frac{d\phi_B}{dt}$
$\Phi_B = \int B.dA$	$pV = nRT = NkT$	$F = qv \times B$	$F = il \times B$
$V(P_1) - V(P_2) = -\int_{P_2}^{P_1} E.ds$	$E = \frac{q}{4\pi\varepsilon_0 r^2}\hat{r}$	$F = \frac{q_1 q_2}{4\pi\varepsilon_0 r^2}\hat{r}$	$V = \frac{q}{4\pi\varepsilon_0 r}$
$\Delta V = -E\Delta x$	$dB = \frac{\mu_0 i ds \sin\theta}{4\pi r^2}$	$C = \frac{Q}{V}$	$U = \frac{1}{2}qV = \frac{1}{2}CV^2 = \frac{1}{2}\frac{q^2}{C}$
$\int B.dA = 0$	$B = \mu_0 ni$	$\int B.dl = \mu_0 i + \mu i_D$	$pV = nRT = NkT$

Continued next page…

Formula Sheet and Useful Data for PHYC10004
Page 2 of 2

$\frac{V_S}{V_P} = \frac{N_S}{N_P}$	$i_D = \varepsilon_0 \frac{d\Phi_E}{dt}$	$C = \frac{A\varepsilon_0}{d}$	$\rho = \frac{M}{V}$
$\tau = \mu \times B$	$U = -\mu . B$	$\mu = i \times (area\ of\ loop)$	$E = \frac{E_{free}}{\kappa}$
$Q = mL$ $Q = mc\Delta T$	$v_{RMS} = \sqrt{\frac{3kT}{m}}$	$pV^{\gamma} = const$ $\gamma = \frac{c_p}{c_V}$	$W = -\int p dV$ $W = -p\Delta V$
$\lambda_{MAX} T = 2898\ \mu m\, K$	$r_n = a_0 n^2$	$W = -p\Delta V$	$\Delta U = Q + W$
$hf = K_{MAX} + \phi$	$P = \sigma \varepsilon A T^4$	$E_n = \frac{h^2}{8mL^2} n^2$	$E = hf = \frac{hc}{\lambda}$
$\lambda = \frac{h}{p}$ $c = f\lambda$	$W = -nRT \ln \frac{V_f}{V_i}$	$\Delta\lambda = \frac{h}{mc}(1 - \cos\theta)$	$\Delta x \Delta p \geq \frac{\hbar}{2}$ $\Delta E \Delta t \geq \frac{\hbar}{2}$
$r = (1.2 \times 10^{-15}\text{m}) A^{\frac{1}{3}}$	$\lambda = \frac{\ln 2}{\tau_{1/2}}$	$N(t) = N(0) e^{-\lambda t}$	$r_n = \frac{4\pi\epsilon_0 \hbar^2}{me^2} n^2$
$\frac{\text{B. E.}}{c^2} = (A - Z) m_n + Z m_p - m_{\text{nucleus}}$		$E_n = -\frac{13.6}{n^2}$	$v_n = c\alpha_{\text{em}} \frac{1}{n}$
$\alpha_{\text{em}} = \frac{e^2}{4\pi\epsilon_0 \hbar c} \approx \frac{1}{137}$	$f = cR\left(\frac{1}{n_2^2} - \frac{1}{n_1^2}\right)$	$a = \frac{h^2 \varepsilon_0}{\pi m e^2} = 52.92\ pm$	

Library Course Work Collections

Author/s:
Physics

Title:
Physical Science and Technology, 2016 Semester 2, PHYC10004

Date:
2016

Persistent Link:
http://hdl.handle.net/11343/127889